Acme Sanitary Ware Co. Ltd.
1/F, Acme Building, 22-28 Nanking Street, Kowloon, Hong Kong
Tel: 2388 7171 Fax: 2710 8012
Email: acme@acmesanitary.com.hk
Website: www.acmesanitary.com.hk
Since 1949

GROHE Pure Freude an Wasser

PROJECT		REF		REV	ITEM CODE	
LOCATION		DATE			PAGE	

SANITARY WARE SPECIFICATION SHEET

Item Descriptions	GROHE (Germany) "Eurocube" Chrome plated single-lever shower mixer with concealed body
Dimensions	L158 x W154 x H177 mm
Model	24061000 (Shower mixer) 35600000 (Mounting box)
Finish / Material	Chrome Plated
Country of origin	Germany
Manufacturer	GROHE Limited
Supplier	Acme Sanitary Ware Co. Ltd Mr. Eric Wong/ Mr. Wilson Hung
Contact Tel/Fax E-mail Website	(852) 2388-7171 / (852) 2710-8012 acme@acmesanitary.com.hk www.acmesanitary.com.hk

Illustration/ Drawing



"Eurocube"
Single-lever shower mixer

- set for final installation for
- GROHE Rapido SmartBox (35 600)
- **GROHE SilkMove** 46 mm ceramic cartridge
- **GROHE StarLight** chrome finish
- wall escutcheon with **GROHE QuickFix** (covered escutcheon- and shaft sealing, covered fixing)
- metal escutcheon, retroactively 6° adjustable
- metal lever
- flow performance: outlet B or C = 30 l/min
- without roughing-in-set




"Rapido SmartBox"
Universal rough-in box, 1/2 〃

- 3 outlets 1/2"
- 2 inlets below, 1/2"
- installation depth 75-105 mm
- connection unit in DR brass
- pre-mounted flushing plug
- stable build-in box and protective cover
- fixation options for solid walls and dry cladding
- gasket
- without set for final installation



Colour options:
- 000 I StarLight Chrome
- DC0 I SuperSteel
- AL0 I Brushed Hard Graphite



Note: YouTube (Rapido SmartBox | Installation Video) https://www.youtube.com/watch?v=KsWdVrq9fVI
YouTube (Grohe24061000) https://www.youtube.com/watch?v=FRvU_On4Xj0

** All information of the above is for the reference only. No prior notice is made if any changes.*

Acme Sanitary Ware Co. Ltd.
1/F, Acme Building, 22-28 Nanking Street, Kowloon, Hong Kong
Tel: 2388 7171 Fax: 2710 8012
Email: acme@acmesanitary.com.hk
Website: www.acmesanitary.com.hk
Since 1949

GROHE Pure Freude an Wasser

PROJECT		REF		REV	ITEM CODE	
LOCATION		DATE			PAGE	

SANITARY WARE SPECIFICATION SHEET

GROHE
EUROCUBE

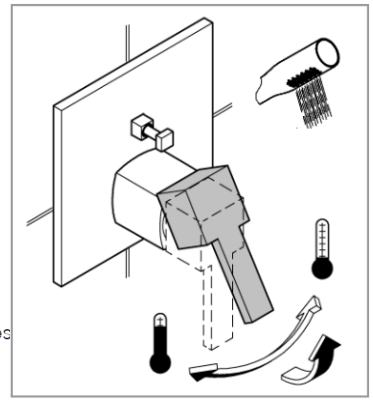

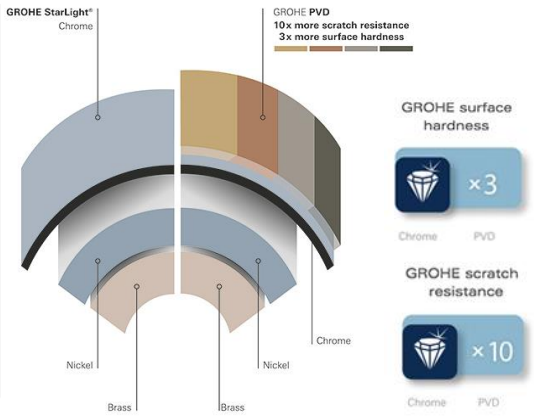

MAKE A CLEAR STATEMENT

Straightforward, attractive and always focused on the essential. Cosmopolitan life in the teeming city becomes a bit more manageable if you are surrounded by straight lines. The overarching concept of GROHE Eurocube evokes the dynamic lifestyle of busy people and celebrates the dramatic beauty of the cube. Enjoy a bit of clarity.



GROHE QuickFix Plus quick and easy installation in a few simple steps

Save time on the installation of your tap with GROHE QuickFix Plus. Consisting of fewer parts, our new system makes the installation process quicker and easier than ever.

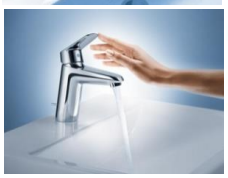

GROHE SilkMove cartridge technology for smooth handling

This premium tap comes with a continuously variable water temperature and volume adjustment technology, ensuring effortless lever operation even after years of use.

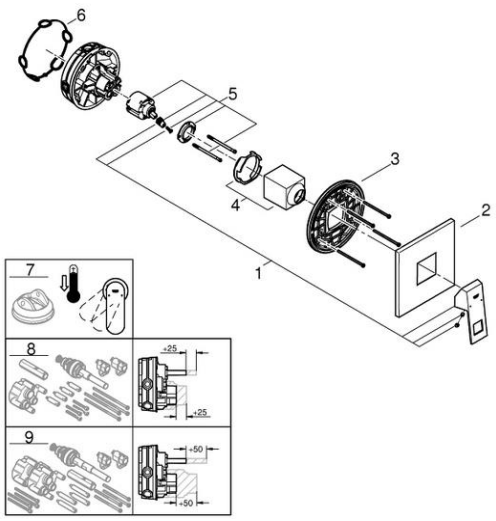

Pos.-nr.	Prod. Description	Order-nr.
1	Lever	46782000
2	Escutcheon	48430000
3	Mounting plate	48441000
4	Shield	46784000
5	Cartridge	46048000
6	Ball seal dia. 9x6.8 mm	48360000
7	Temperature limiter	46375000*
8	Universal extension set single-lever mixers, 25 mm	14056000*
9	Universal extension set single-lever mixers, 50 mm	14057000*

* Optional accessories

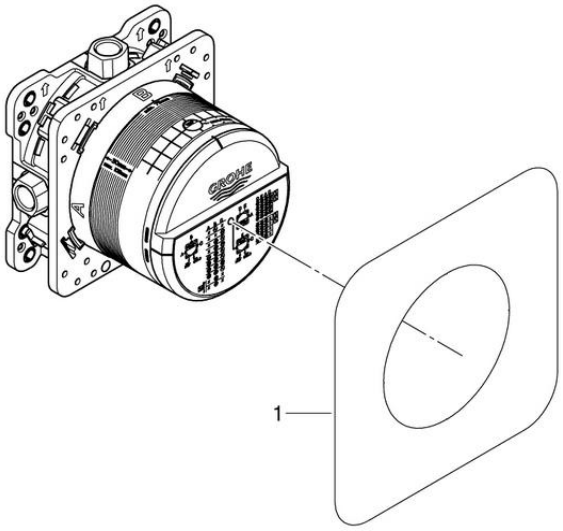

Pos.-nr.	Prod. Description	Order-nr.
1	Repl. kit f. seal	48263000*

* Optional accessories

Note:

** All information of the above is for the reference only. No prior notice is made if any changes.*

水務署
Water Supplies Department

總部 Headquarters
…告士打道七號入境事務大樓 48 樓
…ation Tower, 7 Gloucester Road, Wan Chai, Hong Kong

ACME SANITARY WARE CO., LTD. 2388 7171

本署檔號 Our ref. (2) in … 3321/2024 T/J(890/2024)
來函檔號 Your ref.

電話 Tel. :
傳真 Fax. : 2824 0578

25 September 2024

Approval of "GROHE" Shower Mixers
(General Acceptance No. C20240661)

Your E-Application [file-id: ETJ-GA-20240901-278] dated 3 September 2024 refers.

Having considered the test report ref. J29986 issued on 3 September 2024 by Nutek Systems (HK) Ltd., this Authority accepts that the fittings described below comply with, and their use when correctly installed does not contravene, the Waterworks Ordinance and Regulations.

Name of Manufacturer:	Grohe AG
Country of Origin:	Germany
Brand:	Grohe
Details of Fittings:	1/2" Single lever shower mixer
Model:	35600000 + 24044XXX, 35600000 + 24061XXX (where "XXX" denotes the code of colour)

香港環境卓越大獎
10 years+ 同心展望 caringorganisation

35600000 + 24042XX3, 35600000 + 24046XX3,
35600000 + 24048XX3, 35600000 + 24051XX2,
35600000 + 24053XX1, 35600000 + 24055XX2,
35600000 + 24057XX1, 35600000 + 24059XX3,
35600000 + 24063XX1, 35600000 + 24161XX1,
35600000 + 24168XX1
(where "XX" denotes the code of colour)

Body Markings: GROHE

Expiry Date: 15 July 2029

This Authority hereby permits the use of the above fittings in fresh water plumbing systems subject to full adherence to Waterworks installation requirements. In particular, you are required to draw your customers' attention to the following requirement-

> "The cold water supply to the fittings shall be drawn from the same source that supplies the hot water apparatus so as to provide a balanced pressure and to obviate the risk of scalding in the event of a restriction or failure in the water supply." AND

> "The shower head or handspray should not be placed in submerged conditions and should be securely fixed to the original position after use."

A condition of this acceptance is that the fittings to be installed shall be replicas of the samples as certified by the testing agent mentioned above and without modifications. This acceptance may be withdrawn at any time if the standard of the fittings installed fails to meet that of the approved samples or if the fittings are found to be unsuitable for use in fresh water plumbing systems.

This acceptance is only applicable to the main body of the fittings, unless otherwise specified.

For the use of the fittings in any project, the General Acceptance Number of this letter must be quoted as a means of identification of acceptance of the fittings by this Authority.

Should you have any enquiries, please contact our Engineer Mr Albert CHOW at tel. no. 3583 4086.

Yours faithfully,

(Terry KUNG)
for Director of Water Supplies

Encl.

c.c. WSD 3321/1/82] - without catalogue
ME/MC] - with soft copy only